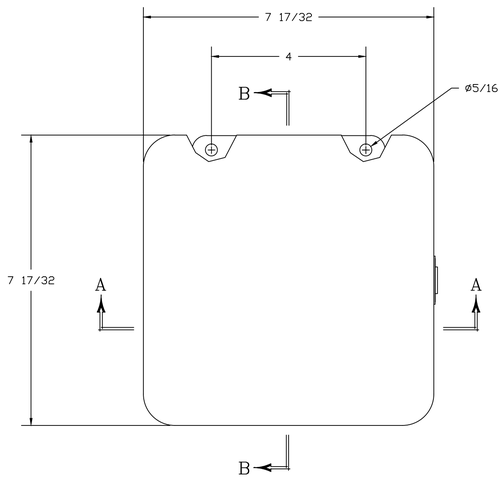

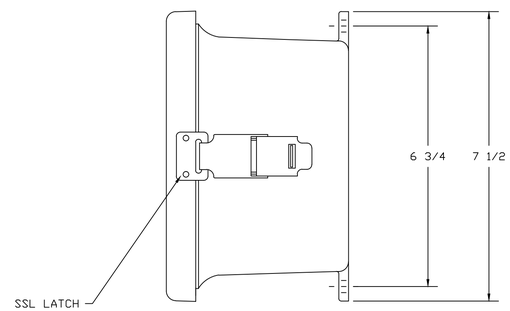

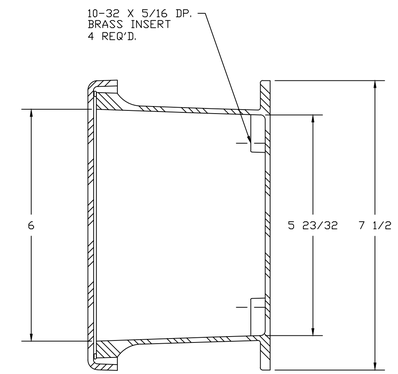

SECTION B–B

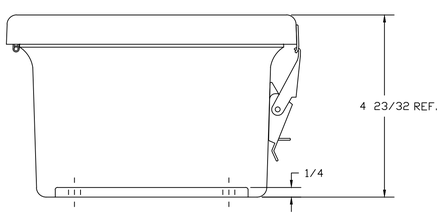

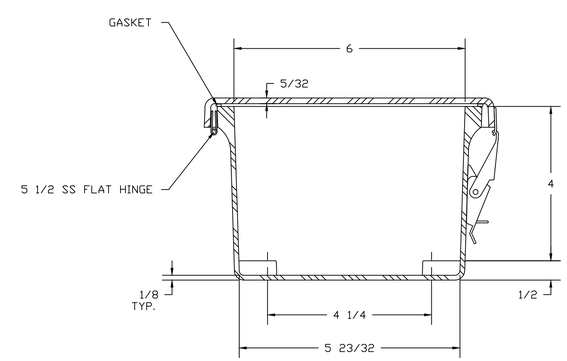

SECTION A–A

NOTES:

NEMA 4X		TOLERANCES UNLESS SPECIFIED	DECIMAL ±.010 / FRACTIONAL ± 1/32
COLOR WHITE RR3008			
MATERIAL F.R. POLYESTER FIBERGLASS	DR. BY SH / DATE 6/10/91	STAHLIN ENCLOSURES DIVISION OF ROBROY INDUSTRIES	BELDING,MICHIGAN 48809
LET. / REVISION RECORD / DATE / BY / CHD.	CHK. BY / DATE		
	APD. BY / DATE	CUSTOMER	AutoCAD DWG. FILE WH-J606HPL
	SCALE DO NOT SCALE	PART NAME ENCLOSURE	PART NO. WH-J606HPL