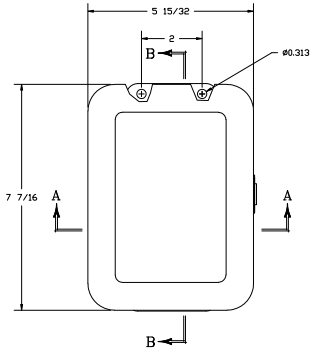

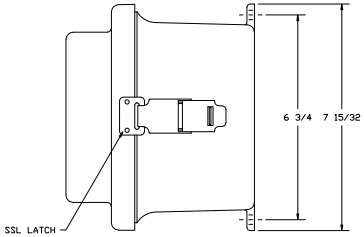

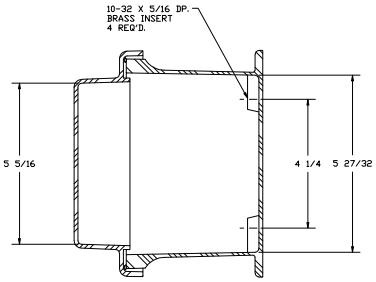

SECTION B-B

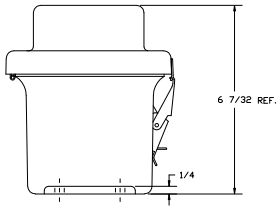

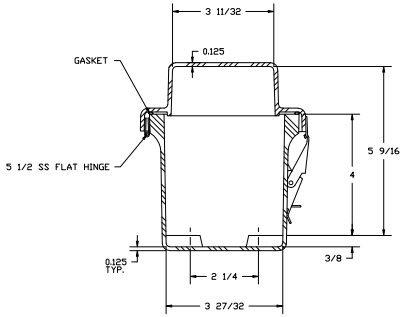

SECTION A-A

NOTES:

NEMA 4X

COLOR GLACIER GRAY RR1013

MATERIAL: F.R. POLYESTER FIBERGLASS

LET.	REVISION RECORD	DATE	BY	CHD.

DR. BY	SH	DATE 6/14/91
CHK. BY		DATE
APD. BY		DATE
SCALE	DO NOT SCALE	

TOLERANCES UNLESS SPECIFIED: DECIMAL ± .010; FRACTIONAL ± 1/32

STAHLIN ENCLOSURES
DIVISION OF KIDMOR INDUSTRIES

BELDING, MICHIGAN 48809

CUSTOMER

AutoCAD DWG FILE

PART NAME: ENCLOSURE

PART NO. RJ604HPL