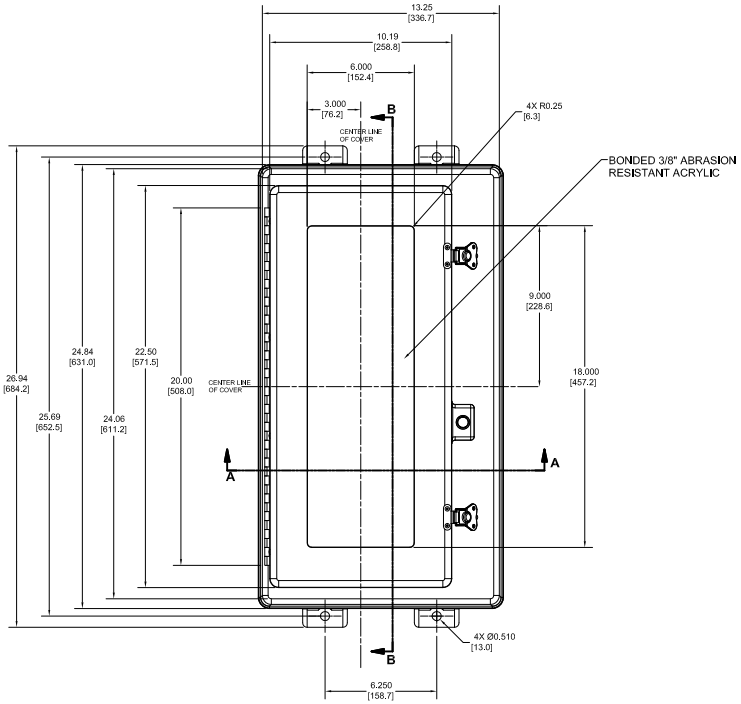

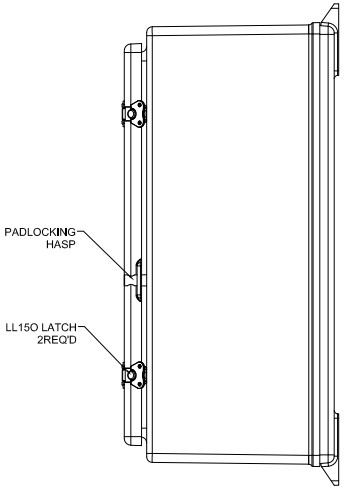

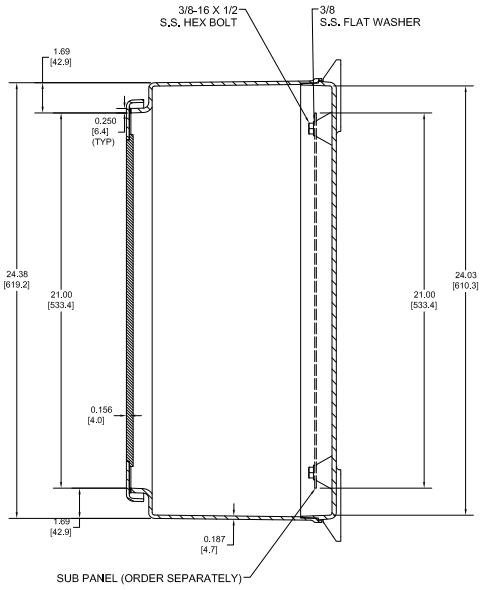

SECTION B-B

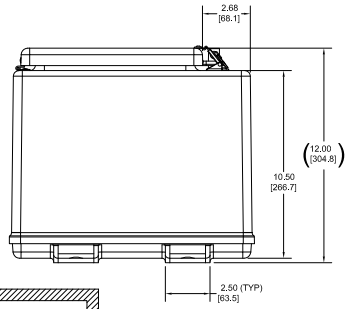

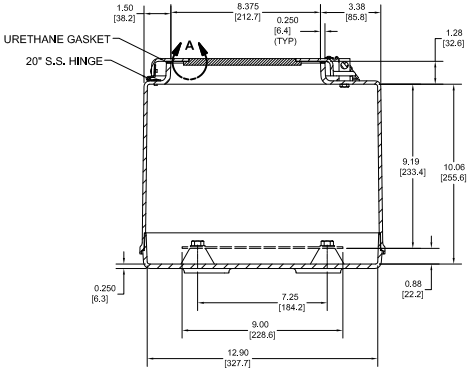

SECTION A-A

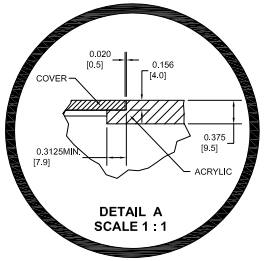

DETAIL A
SCALE 1 : 1

SPECIAL REQUIREMENTS

BONDED WINDOWS

1. ROUTE COVER FACE DOWN AND REMOVE THE TWO MOUNTING BOSS' WHEN REQUIRED.

2. ROUGH BOTH SURFACES BEFORE BONDING.MINIMUM OVERLAP BETWEEN THE WINDOW AND THE ENCLOSURE IS 0.312".ACRYLIC NEEDS TO BE A MINIMUM 0.125" THICKNESS FOR OPENING SIZES UP TO 14-3/8" X 18-3/8" AND A MINIMUM 0.375" THICKNESS FOR OPENING SIZES LARGER THAN 14-3/8" X 18-3/8" UP TO 31-3/8" X 44-3/8".WINDOW MATERIAL THICKNESS MAY FLUCTUATE ACCORDING TO MANUFACTURE SPECIFIED TOLERANCES:

   SAR/CLASS B: [0.125"+.020 & -.030] [0.375"+.030 & -.060].
   ACRYLITE A/2: NOMINAL SIZE 0.354"+/-.018

UL FILE #E64358,VOL.1,SEC.GEN TYPE RATINGS 1,3R,4X,12.

THIS DRAWING AND THE INFORMATION HEREON ARE OUR PROPERTY AND MAY BE USED BY OTHERS ONLY AS AUTHORIZED BY STAHLIN ENCLOSURES, DIVISION OF ROBROY INDUSTRIES
ALL RIGHTS RESERVED
UNDER THE COPYRIGHT LAWS

NOTES: UL/CSA TYPE 1, 3R, 4X, 12

COLOR GLACIER GRAY RR3013 ; CLEAR ACRYLIC

MATERIAL: FR POLYESTER FIBERGLASS

LTR	REVISION RECORD	DATE	BY	CHD
-	-	-	-	-
-	-	-	-	-
-	-	-	-	-
-	-	-	-	-
-	-	-	-	-

DR. BY: DEVI — DATE: 1/11/2009
CHK. BY — DATE
APD. BY — DATE
SCALE: DO NOT SCALE

ALL DIMENSIONS ARE INCHES (MILLIMETERS) UNLESS SPECIFIED

TOLERANCES UNLESS SPECIFIED .XX ± 0.03(0.79) .XXX ± 0.010 (0.25)

STAHLIN ENCLOSURES
DIVISION OF ROBROY INDUSTRIES

BELDING, MICHIGAN 48809

CUSTOMER

CAD DWG.FILE: NW24208HWT

SHT 1 OF 2

PART NAME: ENCLOSURE

PART NO.: NW241210HWT