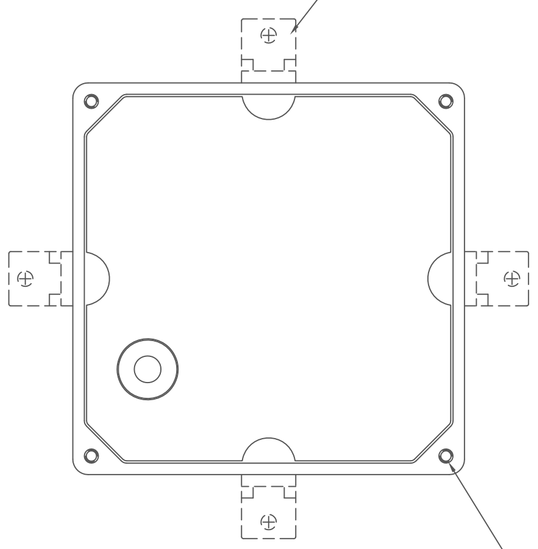

TOP VIEW
WITHOUT COVER

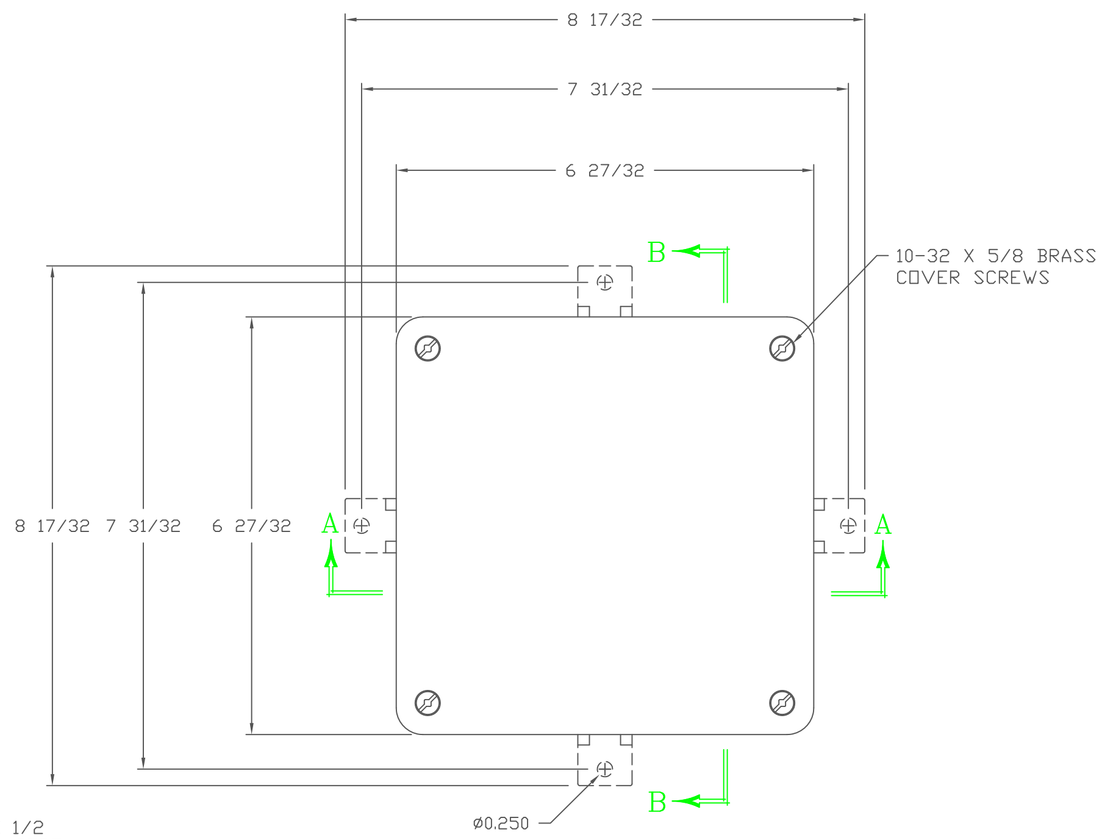

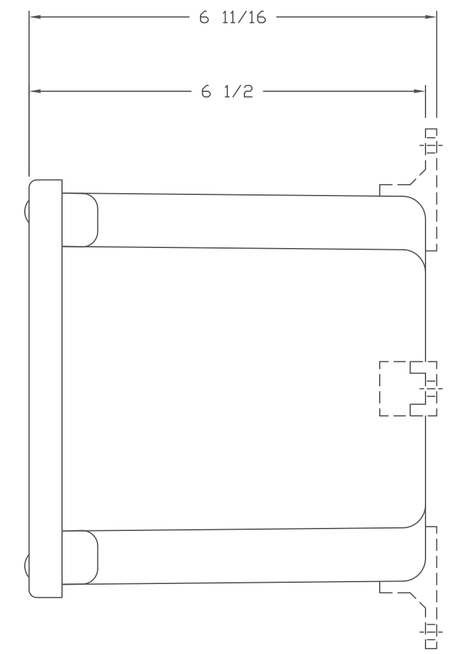

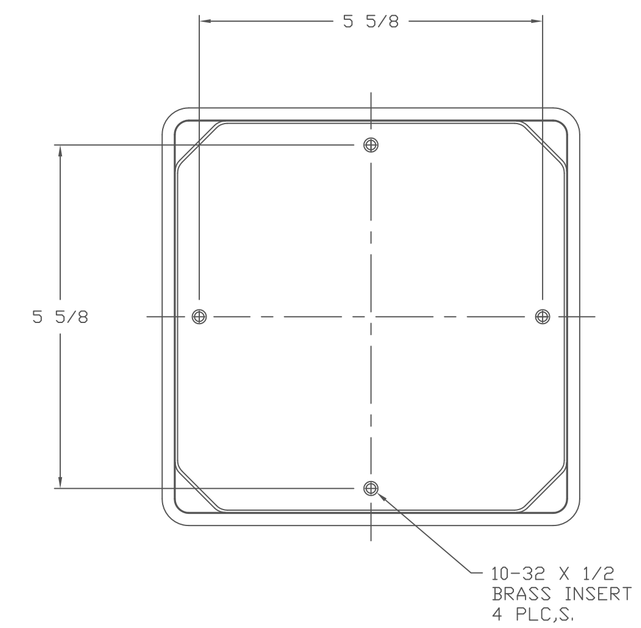

BACK VIEW
WITHOUT MOUNTING TABS

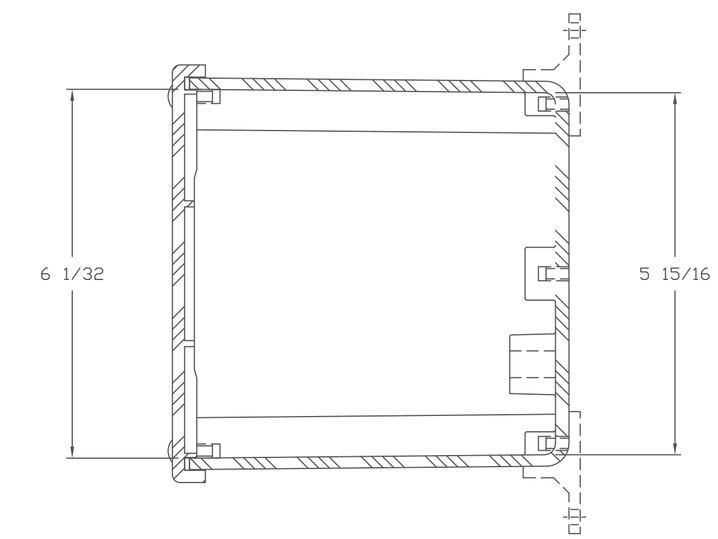

SECTION B-B

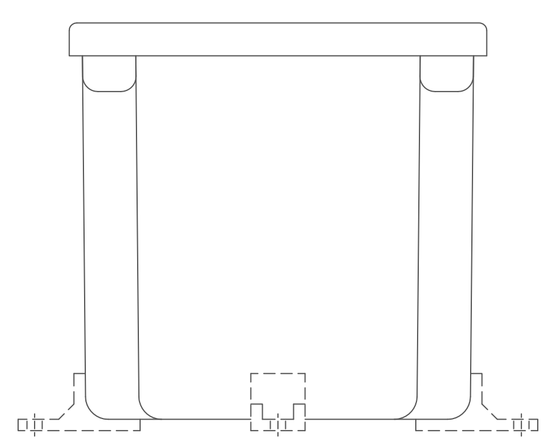

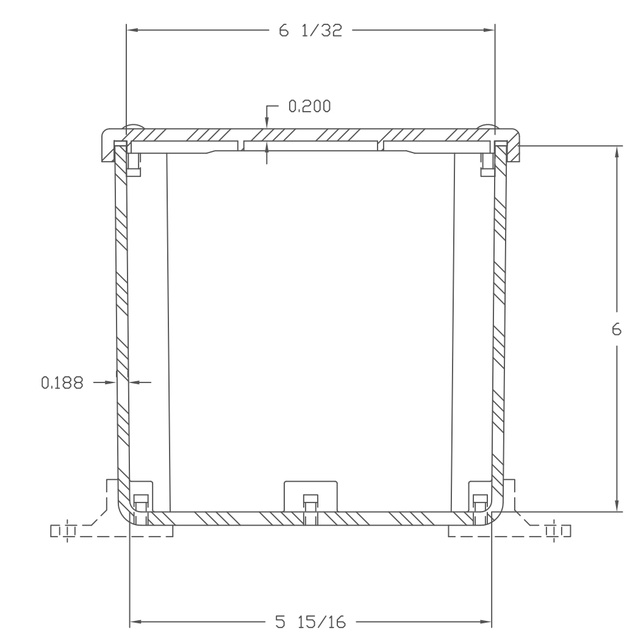

SECTION A-A

NOTES:

COLOR: GRAY

TOLERANCES UNLESS SPECIFIED: DECIMAL ± .010 FRACTIONAL ± 1/32

MATERIAL: PVC

DR. BY: GF DATE: 7/23/93

CHK. BY DATE

APD. BY DATE

LET.	REVISION RECORD	DATE	BY	CHD.

STAHLIN ENCLOSURES
DIVISION OF ROBROY INDUSTRIES

BELDING, MICHIGAN 48809

CUSTOMER

AutoCAD DWG. FILE: J666PVC

SCALE: DO NOT SCALE

PART NAME: ENCLOSURE

PART NO.: J666PVC