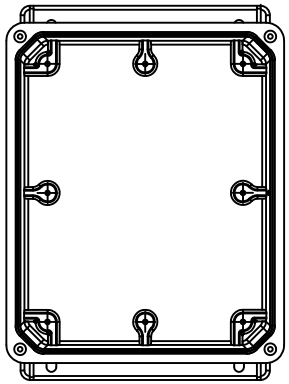

BASE VIEW W/OUT COVER

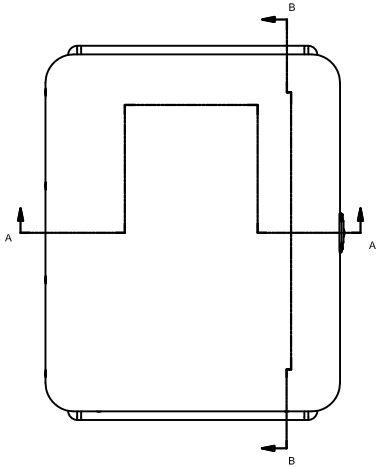

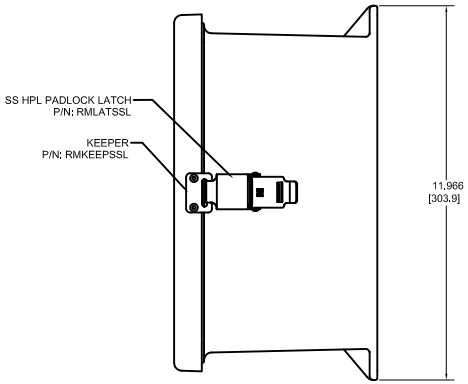

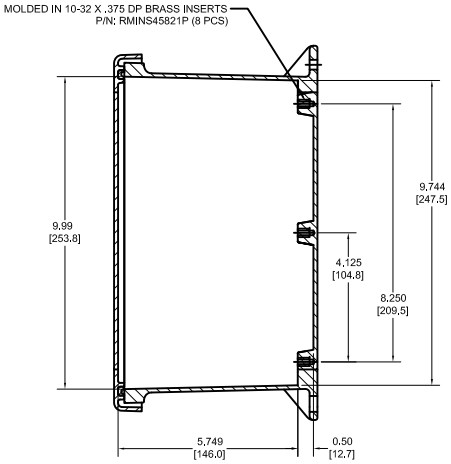

SECTION B-B

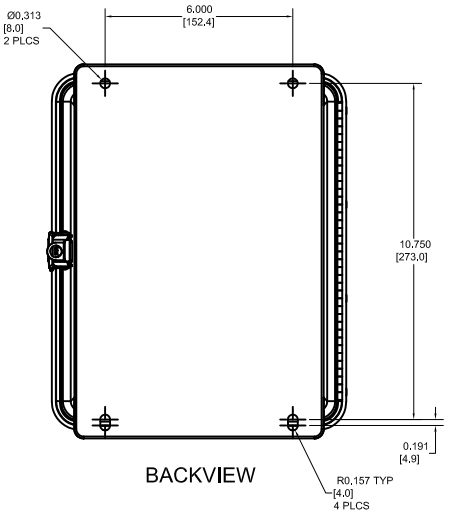

BACKVIEW

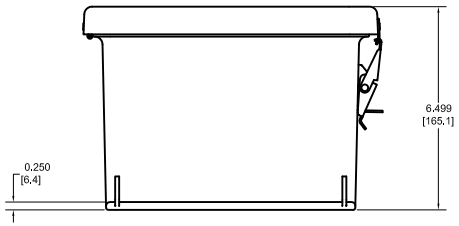

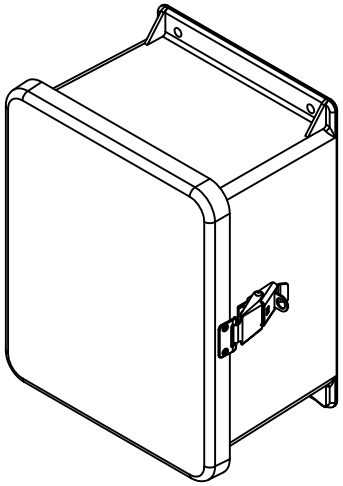

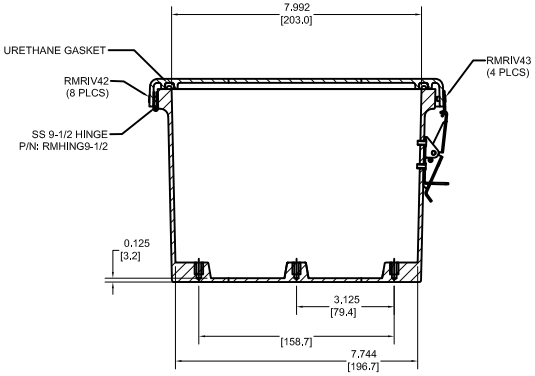

SECTION A-A

NOTES: COLOR: GLACIER GREY RR3013						ALL DIMENSIONS ARE INCHES (MILLIMETERS) UNLESS SPECIFIED	TOLERANCES UNLESS SPECIFIED .XX ± 0.03 (0.79) .XXX ± 0.010 (0.250)	
MATERIAL F.R. POLYESTER FIBERGLASS				DR. BY LB	DATE 5/8/08	STAHLIN ENCLOSURES DIVISION OF ROBROY INDUSTRIES	BELDING, MICHIGAN 48809	
LET.	REVISION RECORD	DATE	BY	CHD.	CHK. BY	DATE		
					APD. BY	DATE	CUSTOMER STAHLIN	SHT 1 OF 3
					SCALE 1:2		PART NAME J-SERIES ENCLOSURE	PART NO. J100806HPL

THIS DRAWING AND THE INFORMATION HEREON ARE OUR PROPERTY AND MAY BE USED BY OTHERS ONLY AS AUTHORIZED BY STAHLIN ENCLOSURES, A DIVISION OF ROBROY INDUSTRIES UNDER THE COPYRIGHT LAWS