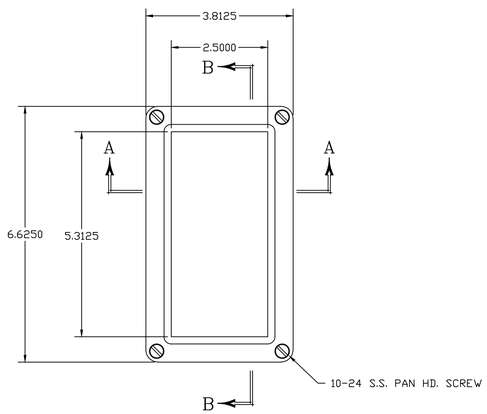

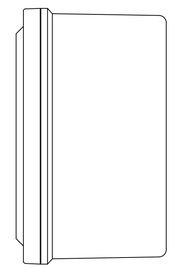

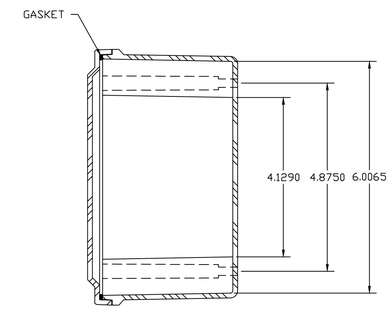

SECTION B–B

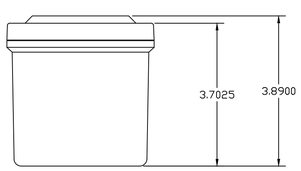

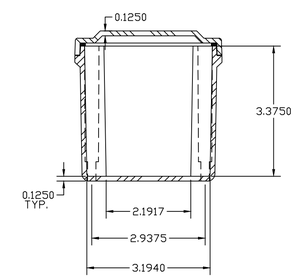

SECTION A–A

NOTES:

NEMA 4X		TOLERANCES UNLESS SPECIFIED	DECIMAL ± .010 / FRACTIONAL ± 1/32
COLOR GLACIER GRAY RR1013			
MATERIAL F.R. POLYESTER FIBERGLASS	DR. BY SH	DATE 7/17/91	STAHLIN ENCLOSURES DIVISION OF ROBROY INDUSTRIES — BELDING, MICHIGAN 48809
LET. / REVISION RECORD / DATE / BY / CHD.	CHK. BY	DATE	
	APD. BY	DATE	CUSTOMER — AutoCAD DWG. FILE CF644
	SCALE DO NOT SCALE		PART NAME ENCLOSURE — PART NO. CF644